DUNAVOX

THE WINE COOLING EXPERT

Wine Cooler

B F

DUNAVOX SERA-58

DX-58.258DB, DSS

DUNAVOX SERA-70

DX-70.258B, SS

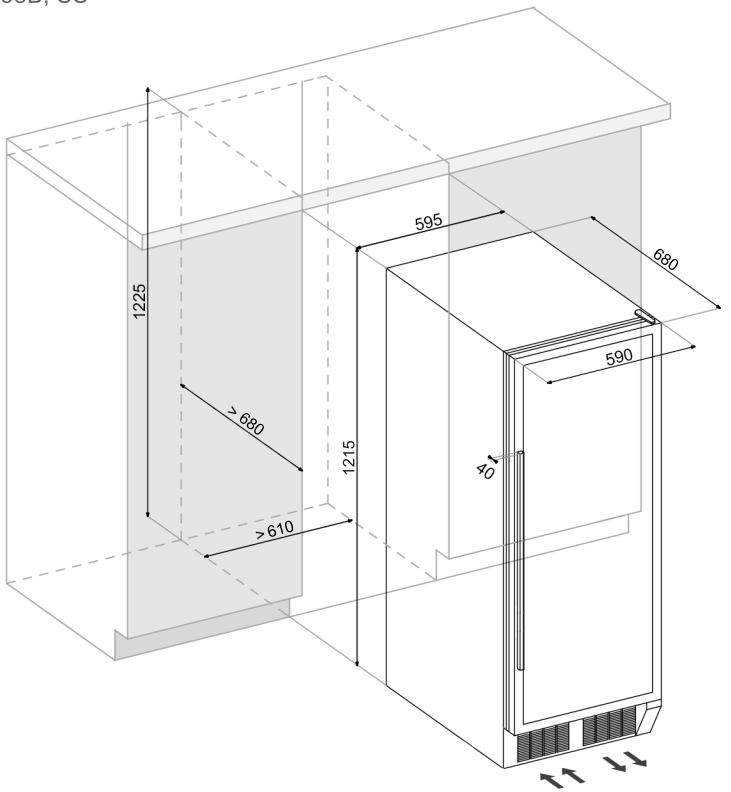

Front View

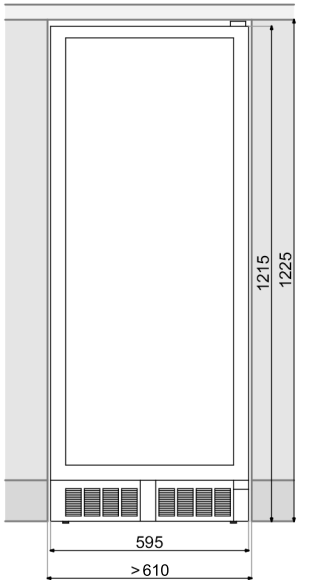

Side View

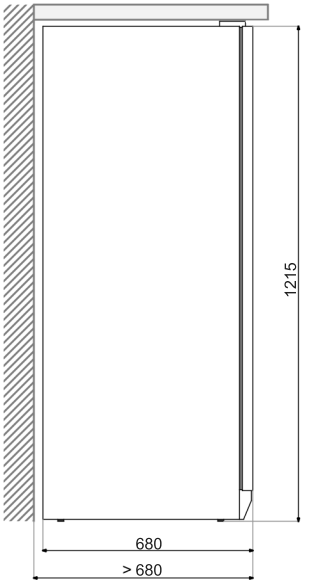

Top View

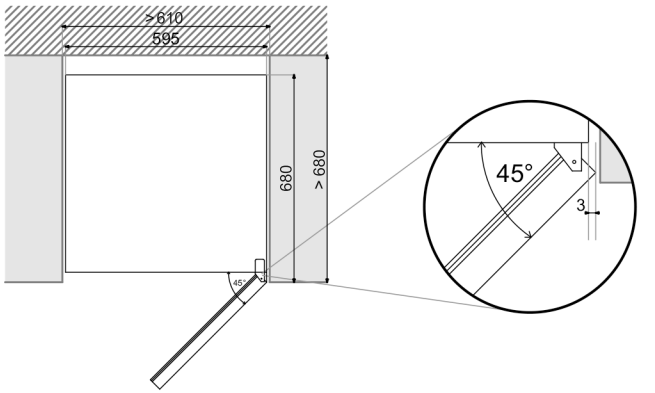

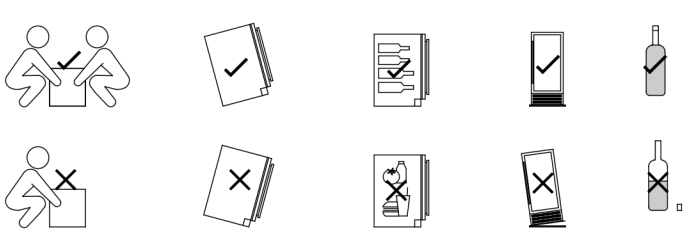

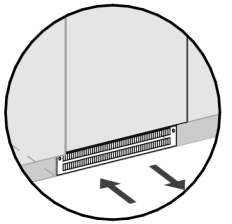

2021.V.1 Copyright Dunavox Kft. All rights reserved. www.dunavox.com